INSTALLATION GUIDE

RAZR Modular

Fixture Arrays for 2’x4’ Grow Racks

RM-292-12-BK4T-2L8S-000-S-AR
RM-292-12-BK3T-2L6S-000-S-AR

GLOBAL

FLUENCE BY OSRAM

THANK YOU FOR CHOOSING FLUENCE!
Please confirm that all hardware and accessories received are correct before you begin the installation.

1. FIXTURE ARRAY CONTENTS **3**
2. CAUTIONS AND WARNINGS **4**
2.1 Fertigation Warning Statement 4
2.2 General Cautions and Warnings 5
2.3 Important Safety Precautions & Explanation of Symbols 6
2.4 Cultivation Best Practices 6
2.5 General Care 6
3. DIMENSIONS AND WEIGHT **7**
3.1 Assembled 2’x4’ Light Fixtures 7
3.2 Power Supply 7
4. PREPARATION FOR SYSTEM INSTALLATION **8**
4.1 Before You Begin 8
4.2 Installation Planning 9
4.3 Installation Steps Overview 11
5. INSTALLATION STEPS **12**
5.1 Step 1 - Assemble the Light Fixtures 12
5.2 Step 2 - Mount the Light Fixtures to the Rack 13
5.3 Step 3 - Install the DC Splitter and Manifold Cables 14
5.4 Step 4 - Mount the Power Supply 17
5.5 Step 5 - Connect the DC Manifold Cable(s) to the Power Supply 19
5.6 Step 6 - Connect the AC Power Cable to the Power Supply 19
5.7 Step 7 - (Optional) Connect the DC Dimming Cable to the Power Supply and then to a Dimming Controller 21
5.8 Step 8 - Power and Test the System 21
6. TROUBLESHOOTING **22**
7. PRODUCT GUARANTEE & WARRANTY **24**

© Copyright 2021 Fluence Bioengineering 2021-04 | Subject to change without notice

1. FIXTURE ARRAY CONTENTS

Please verify the kit contents upon receipt to ensure that you have everything included in the kit. If any contents are missing or damaged, please contact: **www.fluence.science/support-center/** or email **support@fluence.science**

SKU: RM-292-12-BK4T-2L8S-000-S-AR

4-Tier, 3-Bar Fixture Array

1. 48" LED Light Bar

2. 3-Bar, 2-ft Fixture Frame

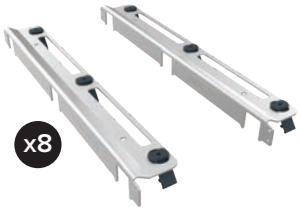

3. 120-277 V AC-DC Power Supply

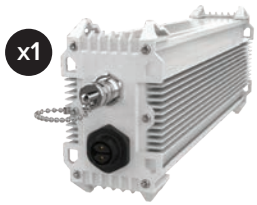

4. 3-Bar DC Splitter Cable

5. 4-Port DC Manifold Cable

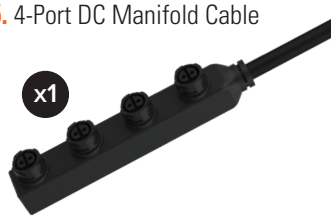

6. Fixture Wire Hangers

7. DC Dimming Signal Cable

8. Power Supply Wire Hangers

9. Power Supply Zip Ties

10. AC Power Cable

(Purchased separately)

SKU: RM-292-12-BK3T-2L6S-000-S-AR

3-Tier, 4-Bar Fixture Array

1. 48" LED Light Bar

2. 4-Bar, 2-ft Fixture Frame

3. 120-277 V AC-DC Power Supply

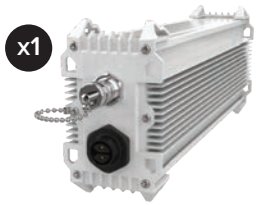

4. 4-Bar DC Splitter Cable

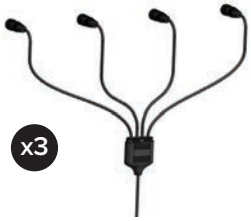

5. 4-Port DC Manifold Cable

6. Fixture Wire Hangers

7. DC Dimming Signal Cable

8. Power Supply Wire Hangers

9. Power Supply Zip Ties

10. Dust Cap

11. AC Power Cable

(Purchased separately)

2. CAUTIONS AND WARNINGS

2.1 FERTIGATION WARNING STATEMENT

CAUTION: Allowing repeated and/or CONTINUED contact with fertigation and/or mineralized water to the light fixture may result in reduced product life or failure, VOIDING warranty of the product.

PRECAUCIÓN: Permitir el contacto repetido y/o continuo con fertirrigación y/o agua mineralizada al dispositivo de iluminación puede resultar en una reducción de la vida útil del producto o en fallas, anulando la garantía del producto.

ATTENTION: Le fait de laisser de l'eau à plusieurs reprises et/ou continue et/ou minéralisée dans le luminaire peut réduire la durée de vie ou produire une défaillance du produit, en annulant ainsi sa garantie.

IMPORTANT: Contact with fertigation, hard mineralized water and other chemicals (including those found in typical tap water) can build up on the LED light fixture or cause corrosion impacting the products performance and life. To maintain the Fluence lighting system at optimal performance and protect your investment, the following cleaning guidelines per the Fluence Light Fixture Cleaning Recommendations are strongly recommended:

IMPORTANTE: El contacto con fertirrigación, agua mineralizada dura y otros productos químicos (incluidos los que se encuentran en el agua del grifo) puede acumularse en el dispositivo de iluminación LED o causar corrosión que afecte el rendimiento y la vida útil del producto. Para mantener el sistema de iluminación Fluence en un rendimiento óptimo y proteger su inversión, se recomiendan encarecidamente las siguientes instrucciones de limpieza según las Recomendaciones de Limpieza de Dispositivos de Iluminación Fluence:

IMPORTANT: Le contact par fertigation, par l'eau minéralisée dure et d'autres produits chimiques (y compris ceux qui se trouvent dans l'eau du robinet de tout les jours) peut s'accumuler sur le luminaire à DEL ou causer de la corrosion qui affecte les performances et la durée de vie des produits. Il est fortement recommandé d'utiliser les directives de nettoyage suivantes, conformément aux recommandations de nettoyage des luminaires Fluence pour maintenir ce même système d'éclairage à des performances optimales et protéger votre investissement :

CONDITION / CONDICIÓN / ÉTAT	RECOMMENDED ACTION / ACCIÓN SUGERIDA / ACTION RECOMMANDÉE
Minimal or no contact with fertigation, hard water, or other chemicals during a grow cycle. Contacto mínimo o nulo con fertirrigación, agua dura u otros productos químicos durante un ciclo de cultivo. Contact minimal ou inexistant avec la fermentation, l'eau dure ou d'autres produits chimiques pendant un cycle de croissance.	Clean the LED boards or light bars and heat sinks after each grow cycle. Limpia las placas LED o las barras de luz y los disipadores de calor después de cada ciclo de cultivo. Nettoyez les tableaux à DEL ou les barres lumineuses et les dissipateurs thermiques après chaque cycle de croissance.
The light fixture is in accidental direct contact with fertigation, hard water, or other chemicals. El dispositivo de iluminación está en contacto directo accidental con fertirrigación, agua dura u otros químicos. Le luminaire est en contact direct accidentel avec la fertigation, l'eau dure ou d'autres produits chimiques.	Clean the LED boards or light bars and heat sinks immediately per the Fluence Light Fixture Cleaning Recommendations available at: Limpie las placas LED o las barras de luz y los disipadores de calor de inmediato según las Recomendaciones de Limpieza de Dispositivos de Iluminación de Fluence disponibles en: Nettoyez les cartes à LED, les barres lumineuses et les dissipateurs de chaleur immédiatement conformément aux recommandations de nettoyage des luminaires Fluence, disponibles au: **https://fluence.science/support-center/**
The light fixture is in repeated contact with fertigation, hard water, or other chemicals. El dispositivo de iluminación está en repetido contacto con fertirrigación, agua dura u otros químicos. Le luminaire est en contact répété avec la fertigation, l'eau dure ou d'autres produits chimiques.	This is not an approved use case and will void the product warranty. Este no es un caso de uso aprobado y anulará la garantía del producto. Ce n'est pas un boitier approuvé pour l'utilisation et cette action annulera la garantie du produit.

DEFINITIONS OF LIQUID CONTACT WITH A LIGHT FIXTURE:

1. Direct misting, spraying, fogging or splashing droplets or liquid stream from below the fixture on the LED boards or light bars, and heat sinks.
2. Indirect misting, spraying, fogging or splashing droplets in close proximity to the fixture on the LED boards or light bars, and heat sinks.
3. Direct misting, spraying, fogging or splashing droplets from above the fixture on the LED boards or light bars, and heat sinks.

DEFINICIONES DE CONTACTO DE LÍQUIDO CON UN ARTEFACTO DE ILUMINACIÓN:

1. Gotas o chorros de líquido que puedan directamente salpicar, rociar, empañar, humedecer desde debajo del dispositivo en los dispositivos LED o barras de luz y disipadores de calor.
2. Gotas o chorros de líquido que puedan indirectamente salpicar, rociar, empañar, humedecer desde debajo del dispositivo en los dispositivos LED o barras de luz y disipadores de calor.
3. Gotas o chorros de líquido que puedan indirectamente salpicar, rociar, empañar, humedecer desde arriba del dispositivo en los dispositivos LED o barras de luz y disipadores de calor.

DÉFINITIONS DU CONTACT LIQUIDE AVEC UN LUMINAIRE:

1. Pulvérisation en brouillard direct, vaporisation, nébulisation ou éclaboussement de gouttelettes ou le jet de liquide directement sous le luminaire sur les panneaux à DEL ou les barres lumineuses et les dissipateurs thermiques.
2. Pulvérisation en brouillard indirect, pulvérisation, nébulisation ou éclaboussement de gouttelettes ou le jet de liquide sous le luminaire sur les panneaux à DEL ou les barres lumineuses et les dissipateurs thermiques.
3. Pulvérisation en brouillard direct, pulvérisation, nébulisation ou éclaboussement de gouttelettes ou le jet de liquide depuis le dessus du luminaire sur les panneaux à DEL ou les barres lumineuses, et les dissipateurs de chaleur.

2. CAUTIONS AND WARNINGS

2.2 GENERAL CAUTIONS AND WARNINGS

WARNING

Risk of electrical shock. To reduce the possibility of serious injury, always take the proper precautions and unplug the fixture before moving or cleaning.

CAUTION

LED and heatsink surfaces may be hot. Allow sufficient cooling time before handling.

CAUTION

To reduce the risk of overheating or fire, never place operating fixtures face down on a flush surface. Always allow for adequate ventilation of fixtures and power supplies.

CAUTION

To prevent eye damage, avoid looking directly at the unshielded LEDs. **IEC standard 62471 Photobiological Risk Group 1.**

CALIFORNIA PROPOSITION ⚠ 65 WARNING ⚠

WARNING: This product contains chemicals known to the State of California to cause cancer and birth defects or other reproductive harm. **ADVERTENCIA:** Este producto contiene productos químicos reconocidos por el estado de California que provocan cáncer, defectos de nacimiento u otros daños reproductivos.

For more information:
www.P65Warnings.ca.gov

ADVERTENCIA (ES)

Riesgo de descarga eléctrica. Para reducir la posibilidad de lesiones graves, tome siempre las precauciones adecuadas y desenchufe el aparato antes de moverlo o limpiarlo. PRECAUCIÓN - Las superficies LED y del disipador térmico pueden estar calientes. Permita un tiempo de enfriamiento suficiente antes de tocarlos. Para reducir el riesgo de sobrecalentamiento o incendio, nunca coloque los accesorios de operación boca abajo sobre una superficie de descarga. Permita siempre una ventilación adecuada de los accesorios y las fuentes de alimentación. Para evitar daños oculares, evite mirar directamente los LED sin cobertura. IEC 62471 el Grupo de Riesgo Fotobiológico 1.

AVERTISSEMENT (FR)

Risque de décharge électrique. Afin de réduire les risques de blessures graves, il faut toujours prendre les précautions nécessaires et débrancher l'appareil avant de le déplacer ou de le nettoyer. MISE EN GARDE - Les surfaces des DEL et du dissipateur thermique peuvent être chaudes. Prévoyez un temps de refroidissement suffisant avant toute manipulation. Pour réduire le risque de surchauffe ou d'incendie, ne jamais placer les appareils de fonctionnement face vers le bas sur une surface affleurante. Toujours prévoir une ventilation adéquate des appareils et des blocs d'alimentation. Pour éviter les lésions oculaires, il faut éviter de regarder directement les DEL non blindées. CEI 62471 le groupe de risque photobiologique 1.

AVERTISSEMENT CONCERNANT LA PROPOSITION 65 DE LA CALIFORNIE
Ce produit contient des produits chimiques dont l'État de Californie sait qu'ils provoquent le cancer et des malformations de la peau ou d'autres atteintes à la reproduction. Pour en savoir plus: www.P65Warnings.ca.gov

This device complies with part 15 of the FCC Rules. Operation is subject to the following two conditions: (1) This device may not cause harmful interference, and (2) this device must accept any interference received, including interference that may cause undesired operation.

ETL Rating: RAZR Modular Series fixtures are rated suitable for wet locations. A "wet location" is defined as an interior or exterior location in which water or other liquids may drip, splash or flow on or against the electrical components of a lighting fixture. RAZR Modular Series fixtures and power supply are certified to meet UL standards (ETL) from the Intertek safety consulting and certification company. Systems are cETL listed and are rated IP66 by IEC standard 60529.

The light source of this luminaire is not replaceable; when the light source reached its end of life the whole luminaire shall be replaced.

Horticulture Lighting, not suitable for household room illumination.

1 PPF calculations compiled using integrating sphere measurements at a steady state and typical spectroradiometric data for each LED to determine typical fixture performance. Actual photometric results may vary within the LED manufacturer's bin tolerance.

2 Wattage values are typical expected values. Fluence maintains a tolerance of ±10% on flux and power specifications. Target light levels can vary from projected levels depending on ambient temperature, room reflections values and dirt accumulation.

Horticulture Use

2.3. IMPORTANT SAFETY PRECAUTIONS & EXPLANATION OF SYMBOLS

- Please read this manual thoroughly before attempting to install or operate any Fluence RAZR Modular Series system.
- After successful installation and configuration of the system, be sure to retain this manual in a safe place for future reference. Safety is a key component to a long lasting and trouble free installation.
- It is important you read, fully understand, and observe the subsequent safety precautions. If you are not comfortable with the installation of high performance lighting systems, you should seek the services of a qualified installation professional or call us for help.
- NOTICE: RAZR Modular is a high-performance lighting system. **DO NOT TOUCH** while in operation.
- Connect the system only to the power sources of the appropriate voltage using the correct AC plug type. Protect power cables from being pinched, walked on, or otherwise damaged. Be especially careful where the power cable enters the power outlet and the unit. Only connect the system to an electrical outlet or extension cord of appropriate type and rating. Connect the system only to the power sources of the correct voltage using the plug received.
- DO NOT defeat the safety purpose of a grounding or polarized plug by removing ground pins or using unsafe adapters. A polarized plug has two blades – one wider than the other. A grounding plug has a third ground prong in addition to the two main conductors. The wide blade or third grounding prong is provided for your safety. If the provided plug does not fit your outlet, consult an electrician to replace your obsolete outlet. If you replace the power cord, only use one of similar type and equal or greater current rating.
- The system should only be cleaned as directed in the manual. You should seek service for your system by qualified service personnel if any of the following occur:
  1. The power-supply cord or the plug has been damaged.
  2. The unit has been exposed to rain.
  3. The unit exhibits a marked change in performance.
  4. The unit has been dropped, or its enclosure or chassis is damaged.

2.4. CULTIVATION BEST PRACTICES

Fluence encourages everyone to experiment and pursue their own techniques. Every crop is different and everyone has different goals.

For cultivation recommendations visit
https://fluence.science/science-articles/

2.5. GENERAL CARE

RAZR Modular lighting systems are passively cooled with zero moving components. They are designed for harsh environments and years of reliable performance. Some basic care will keep your system operating at peak performance cycle-after-cycle.

For detailed instructions for maintenance and cleaning, refer to the ***Fluence Light Fixture Cleaning Recommendations,*** available at **www.fluence.science/support-center/**

Maximum Ambient Operating Temperature: 104° F / 40° C*
***Note: 95° F / 35° C when operated at 120 V AC supply voltage.**

Maximum Ambient Humidity: 90%, Non-Condensing

SYSTEM SPECIFICATION SHEETS

For complete product information and system specifications please visit
www.fluence.science/support-center/
or email **support@fluence.science**

RAZR Modular is a high-performance lighting system. Do not touch while in operation.

PLEASE RECYCLE ALL PACKAGING MATERIAL.

3. DIMENSIONS AND WEIGHT

3.1 ASSEMBLED 2′ X 4′ FIXTURES

Assembled Light Fixture		Bar Spacing	Length	Width	Height	Weight	Region
A	**2′ x 4′ 3-Bar** RM-292-12-BK4T-2L8S-000-S-AR	8.0″ 203.2 mm	47.75″ 1213 mm	18.9″ 480 mm	1.57″ 39.9 mm	2.9 lb 1.3 kg	Global
B	**2′ x 4′ 4-Bar** RM-292-12-BK3T-2L6S-000-S-AR	6.0″ 152.4 mm		20.9″ 530.8 mm		3.6 lb 1.6 kg	

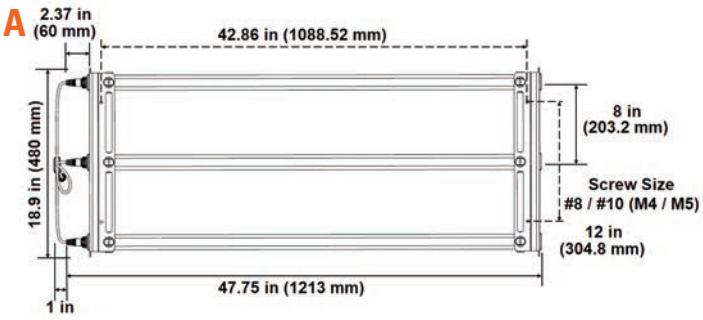

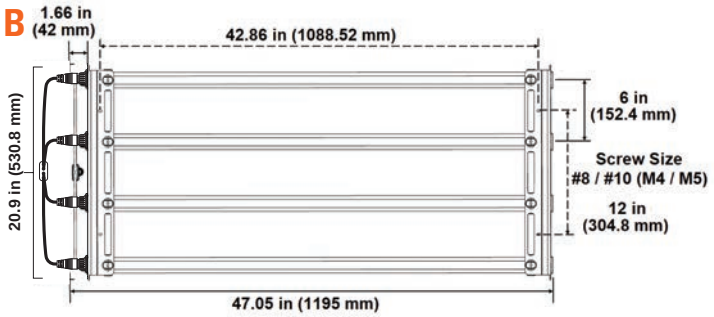

3.2 POWER SUPPLIES

Power Supply Type	DC Wattage	AC Input	Length	Width	Height	Weight	Region
PSU2 LVG	292 W	120-277 V 50/60 Hz	12.60″ 320 mm	4.29″ 109 mm	2.56" 65 mm	4.9 lb 2.3 kg	Global

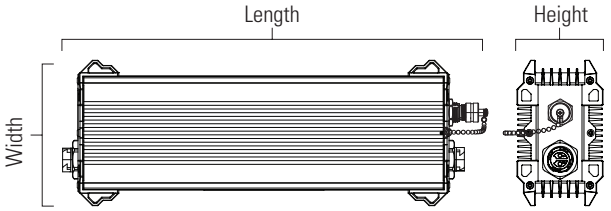

4. PREPARATION FOR SYSTEM INSTALLATION

4.1 BEFORE YOU BEGIN...

IMPORTANT: Please be sure to match the EXACT light bar quantity per power supply to the BAR COUNT on Power Supply SKU label for proper system performance. A differed bar count from SKU label would result in INCORRECT LIGHT OUTPUT from light bars.

IMPORTANTE: Asegúrese de aparear la cantidad EXACTA de barras de luz por la fuente de alimentación con el CONTADOR DE BARRAS en la etiqueta SKU de la fuente de alimentación para un rendimiento adecuado del sistema. Un recuento de barras diferente al de la etiqueta SKU daría como resultado una SALIDA DE LUZ INCORRECTA de las barras de luz.

IMPORTANT: Assurez-vous de faire correspondre la quantité EXACTE de barres lumineuses par alimentation électrique au NOMBRE DE BARRES indiqué sur l'étiquette de référence de l'alimentation électrique pour une performance correcte du système. Un nombre de barres différent de celui sur l'étiquette de référence entraînerait un FLUX LUMINEUX INCORRECT des barres lumineuses.

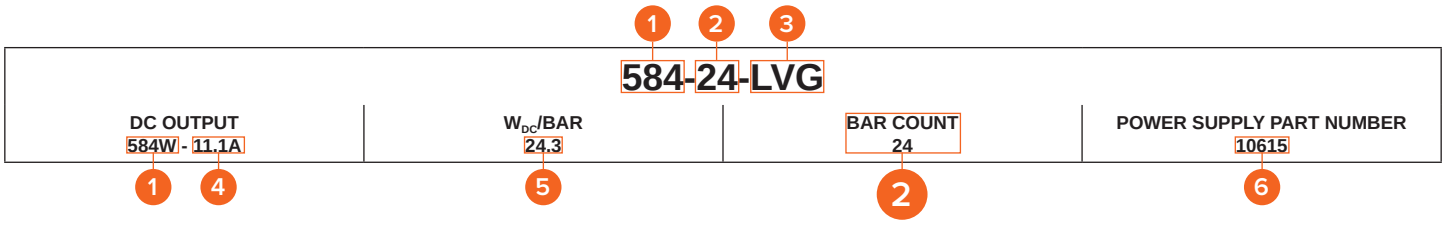

1. Power Supply DC Output Wattage
2. **Light Bar Quantity for Power Supply**
3. Power Supply Type
4. Power Supply DC Output Current
5. DC Watts per Light Bar
6. Power Supply Part Number

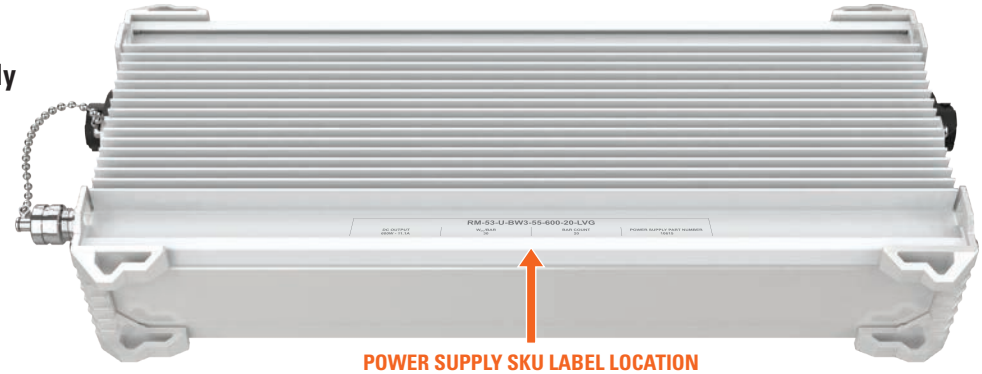

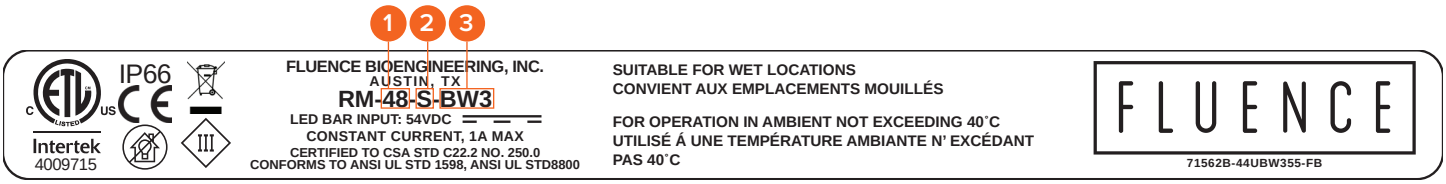

1. Light Bar Model
2. Light Bar LED Distribution
3. Light Bar Spectrum

CAUTION: To protect the LED Array,

- **DO NOT** plug in AC power **BEFORE** connecting the power supply to RAZR Modular light fixtures first.
- The use of gloves is recommended when handling and installing the power supply.

PRECAUCIÓN: Para proteger el conjunto de LED,

- **NO** conecte la alimentación de CA **ANTES** de conectar la fuente de alimentación a los dispositivos de iluminación RAZR Modular.
- Se recomienda el uso de guantes al tocar e instalar la fuente de alimentación.

ATTENTION: Pour protéger la matrice de DEL,

- **NE BRANCHEZ PAS** le câble d'alimentation à une prise CA **AVANT** de brancher le cordon d'alimentation aux luminaires modulaires RAZR.
- L'utilisation de gants est recommandée lors de la manipulation et de l'installation de l'alimentation.

4. PREPARATION FOR SYSTEM INSTALLATION

4.2 INSTALLATION PLANNING

A little planning before beginning the installation can pay big dividends in reduced installation time and labor cost.

1. Review and measure the rack tier spacing to plan the routing of all cables.
2. It is recommended to mount the power supply after the DC splitter and manifold cables. This will enable you to determine the optimal location to mount the power supply so all of the cables and power supply will reach each other when you're ready to plug them in.

SYSTEM COMPONENTS

RM-292-12-BK4T-2L8S-000-S-AR

1. 48" LED Light Bar

2. 3-Bar, 2-ft Fixture Frame

3. 120-277 V AC-DC Power Supply

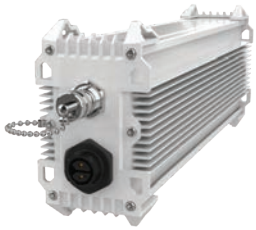

4. 3-Bar DC Splitter Cable

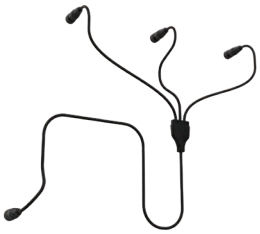

5. 4-Port DC Manifold Cable

Dust Cap

6. Fixture Wire Hangers

7. DC Dimming Signal Cable

8. Power Supply Wire Hangers

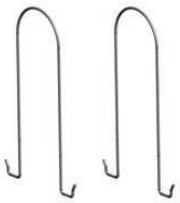

9. Power Supply Zip Ties

10. AC Power Cable
(Purchased separately)

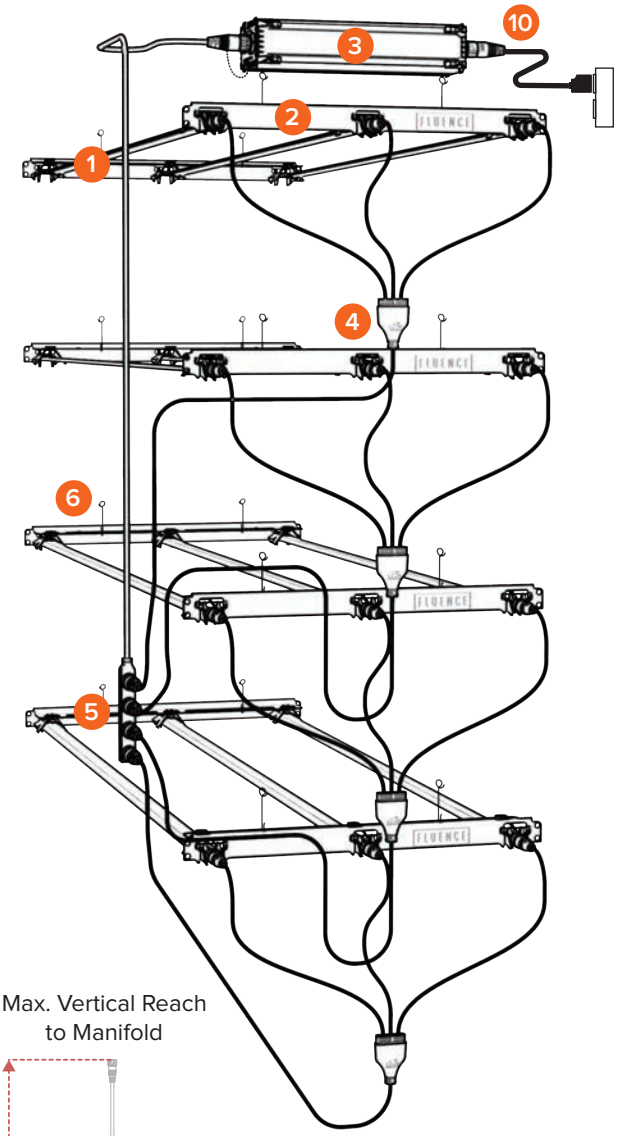

Max. Vertical Reach to Manifold

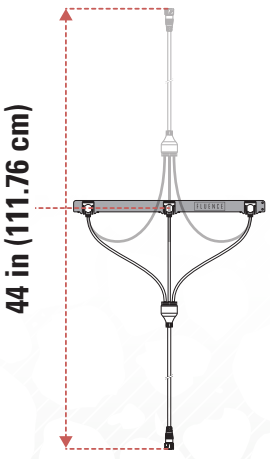

1 in (25.4 mm)
Min. Recommended Bend Radius for all Cables

4.2 INSTALLATION PLANNING

SYSTEM COMPONENTS

RM-292-12-BK3T-2L6S-000-S-AR

1. 48" LED Light Bar

2. 4-Bar, 2-ft Fixture Frame

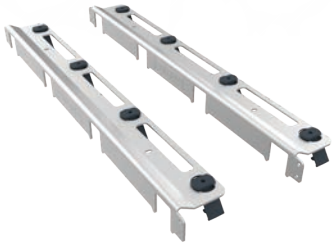

3. 120-277 V AC-DC Power Supply

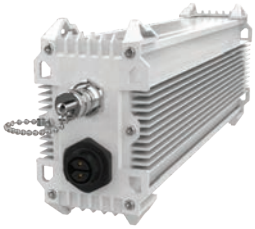

4. 3-Bar DC Splitter Cable

5. 4-Port DC Manifold Cable

Dust Cap

6. Fixture Wire Hangers

7. DC Dimming Signal Cable

8. Power Supply Wire Hangers

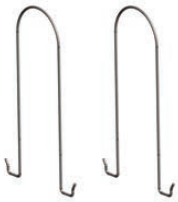

9. Power Supply Zip Ties

10. AC Power Cable
(Purchased separately)

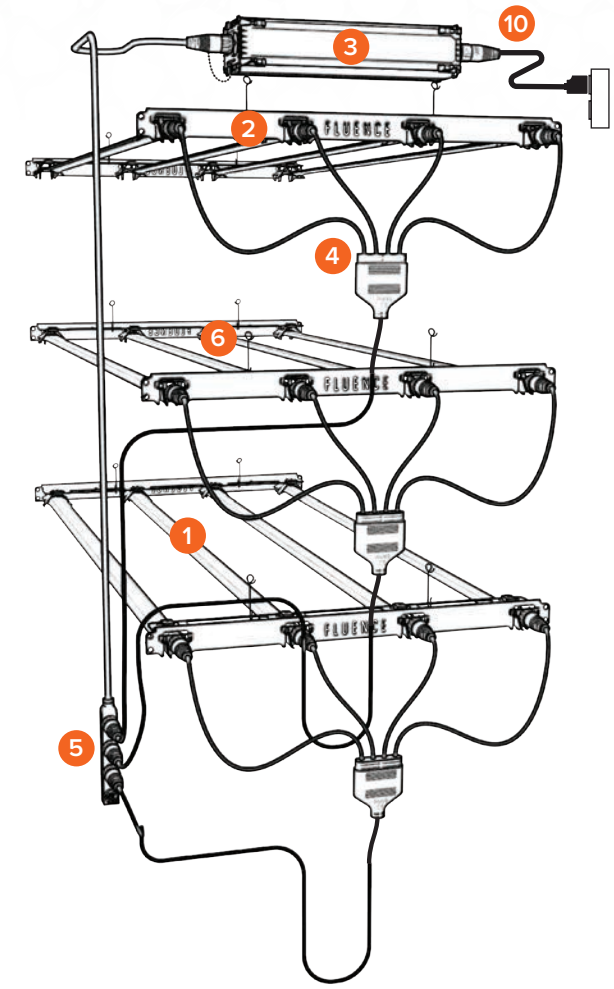

Max. Vertical Reach
to Manifold

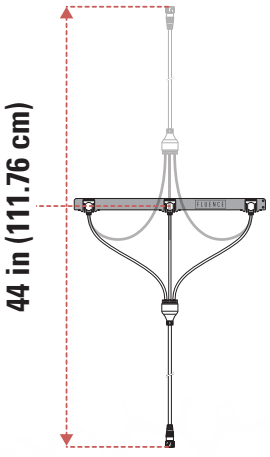

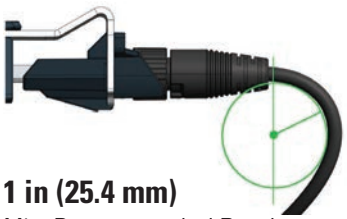

1 in (25.4 mm)
Min. Recommended Bend
Radius for all Cables

4. PREPARATION FOR SYSTEM INSTALLATION

4.3 INSTALLATION STEPS OVERVIEW

IMPORTANT: Read each installation step completely for important notes regarding proper installation before you begin. It is recommended to install RAZR Modular in the following sequence of steps:

IMPORTANTE: Antes de comenzar, lea cada paso de instalación completamente para obtener notas importantes sobre la instalación adecuada. Se recomienda instalar RAZR Modular en la siguiente secuencia de pasos:

IMPORTANT: Lisez complètement chaque étape d'installation pour obtenir des notes importantes concernant l'installation correcte avant de commencer. Il est recommandé d'installer les luminaires modulaires RAZR dans l'ordre suivant:

1. Assemble the light fixtures.
2. Mount the light fixtures to the rack. The minimum recommended mounting height above the plant canopy is:
   3-Tier (4-bar) fixtures: At least 6" (15.3 cm)
   4-Tier (3-bar) fixtures: At least 8" (20.4 cm)
3. Install the DC splitter and manifold cables.
4. Mount the power supply to the rack.
5. Connect the DC manifold cable(s) to the power supply.
6. Connect the AC power cable to the power supply.
7. Optional: Connect the DC dimming cable to the power supply and then to a dimming controller.
8. Power and test the system.

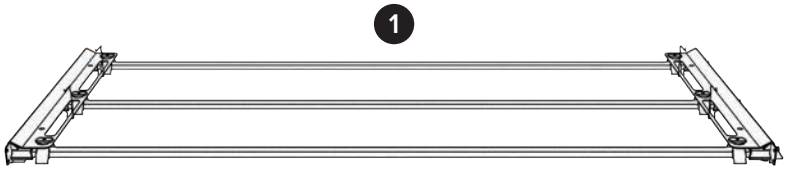

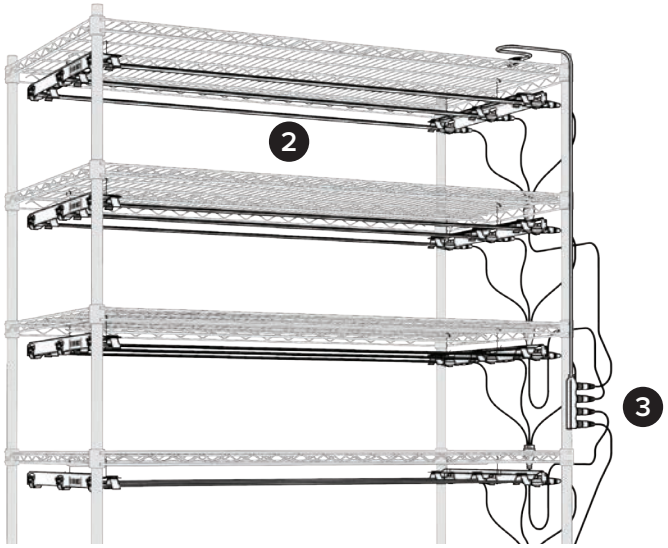

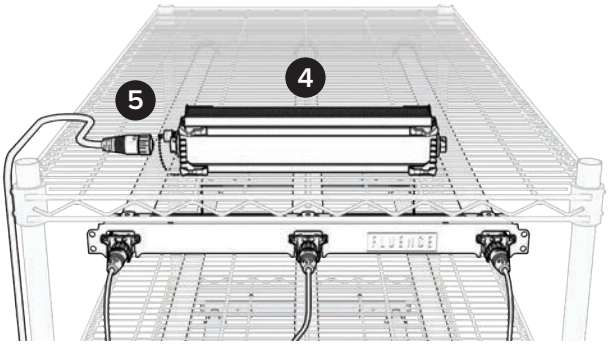

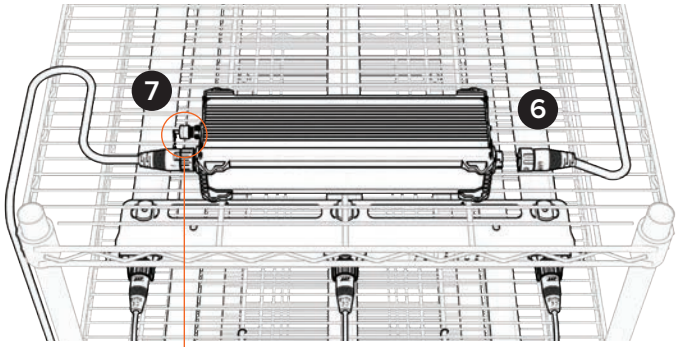

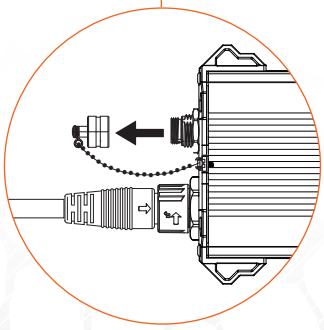

5. INSTALLATION STEPS

5.1 - STEP 1: ASSEMBLE THE LIGHT FIXTURES

- Dedicate a cleared and clean work space for assembling the light fixtures.
- An additional step of connecting the DC splitter cables to the light fixtures as part of the fixture assembly process may reduce work time required on the ladder.

1. Place the fixture frames **upside down (clips up)** on a stable, flat work surface. Orient the fixture frames so that the "FLUENCE" name is facing away from each other as shown.

2. Identify the first LED light bar in the recommended installation sequence for your specific light fixture configuration as show below.

3. Lay the first LED bar **(LED's facing up)** in the frame clips Firmly grip and support the middle of the light bar with one hand, while pressing the light bar down into the clip at one end. **Avoid touching the LED's and only press on the heat sink.** Press each edge of the bar heat sink in until you hear a loud "click". **Ensure the light bar is secure in the clip as shown in the detail.**

4. **Repeat Step 3** for each LED light bar in the recommended sequence.

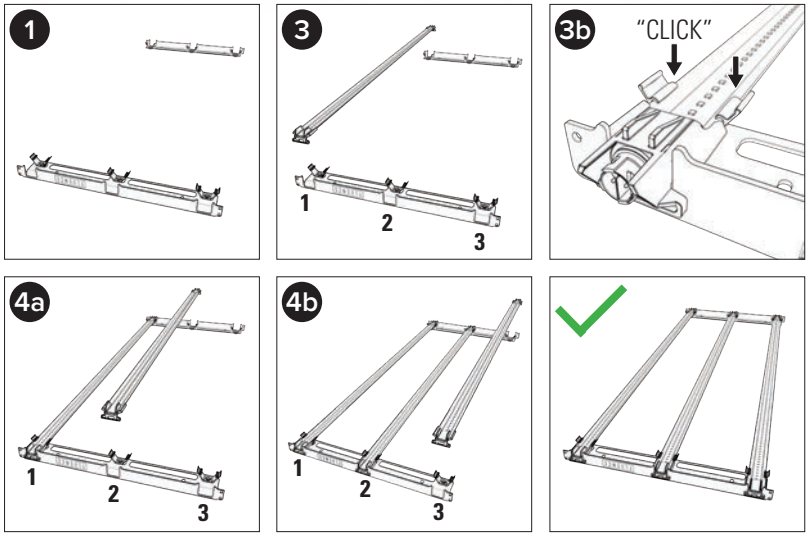

Recommended LED Light Bar Installation Sequences

2' x 4' 3-Bar Fixture (RM-292-12-BK4T-2L8S-000-S-AR)

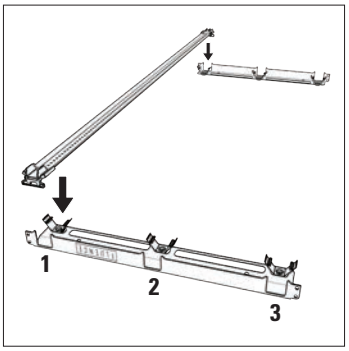

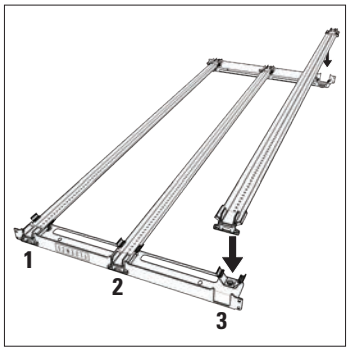

2' x 4' 4-Bar Fixture (RM-292-12-BK3T-2L6S-000-S-AR)

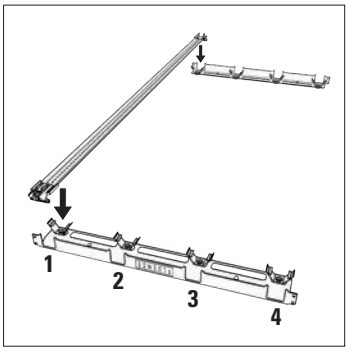

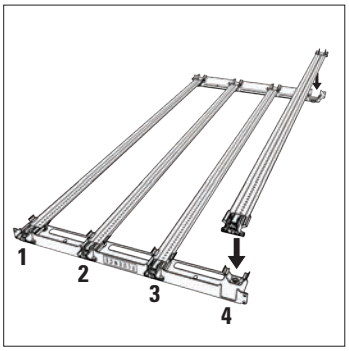

5. INSTALLATION STEPS

5.2 - STEP 2: MOUNT THE LIGHT FIXTURES TO THE RACK

Fixture Wire Hanger, Short - Baker's Rack (RM-SHANGER-01)

2" (50.8 mm) length is ideal for 24" (609.6 mm) deep by 48" (1219.2 mm) long wire shelving (Baker's) racks.

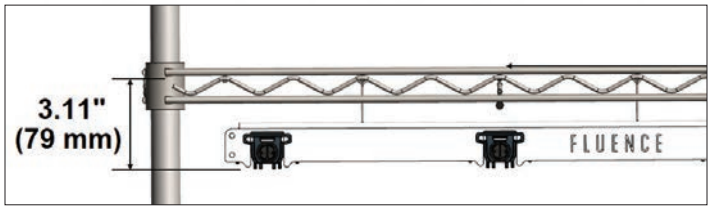

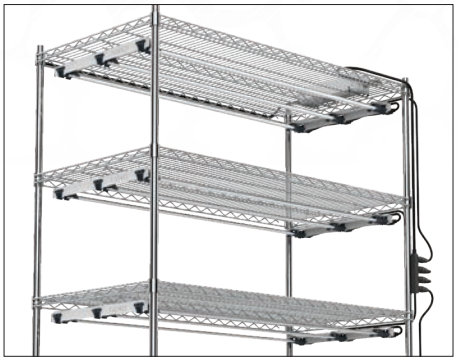

Assembled Light Fixture Mounting Point Measurements

2'x4' 3-Bar Fixture

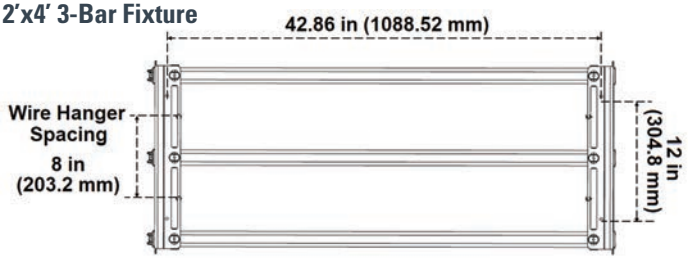

2'x4' 4-Bar Fixture

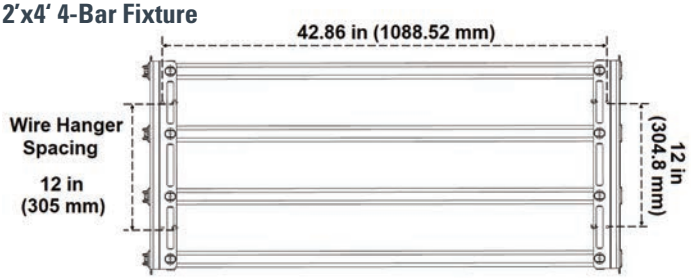

IMPORTANT:
- Two persons are recommended for the mounting of light fixtures to ensure safety.
- Avoid touching the LED's while mounting the light fixtures.

IMPORTANTE:
- Se recomiendan dos personas para hacer el montaje de los dispositivos de iluminación para garantizar la seguridad.
- Evite tocar los LEDs mientras esta encajando y colocando los dispositivos de iluminación.

IMPORTANTE:
- Deux personnes sont recommandées pour le montage des luminaires afin d'assurer la sécurité.
- Évitez de toucher les DEL lors du montage des appareils d'éclairage.

Wire Hanger Mounting Instructions

1. Hang the top hook of 4 wire hangers to the rack shelf frame or wire grid as shown. Space the width between hangers at the minimum recommended spacing for the fixture frame. Space the length between hangers at approximately 42" (1066.8 mm).

2. With assistance from a second person, hook the bottom of each hook through the slot on the fixture frame. The hanger can be securely hooked through the screw hole to prevent lateral movement, or it can be hook along the slot if flexibility in spacing is needed.

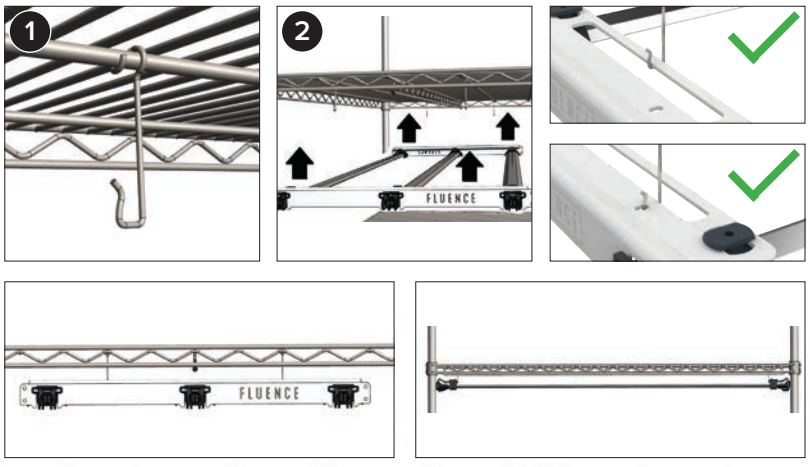

5.2 - STEP 3: INSTALL THE DC SPLITTER AND MANIFOLD CABLES

DC Splitter and Manifold Cable Assembly Diagrams

SKU: RM-292-12-BK4T-2L8S-000-S-AR

4-Tier, 3-Bar Fixture Array

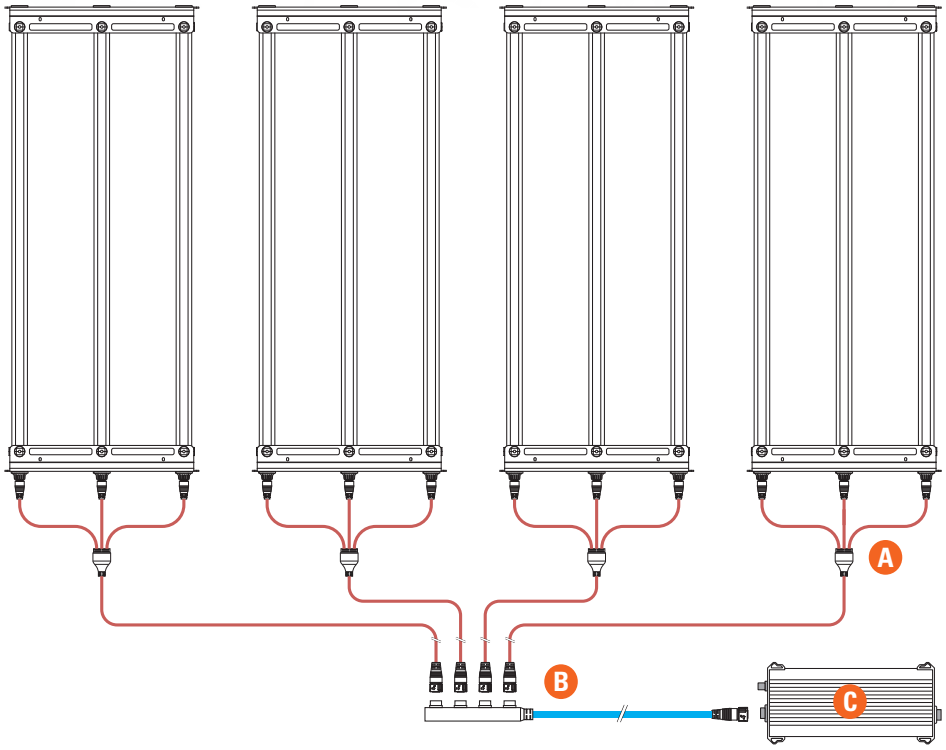

- A DC Splitter Cable
- B DC Manifold Cable
- C Power Supply

SKU: RM-292-12-BK3T-2L6S-000-S-AR

3-Tier, 4-Bar Fixture Array

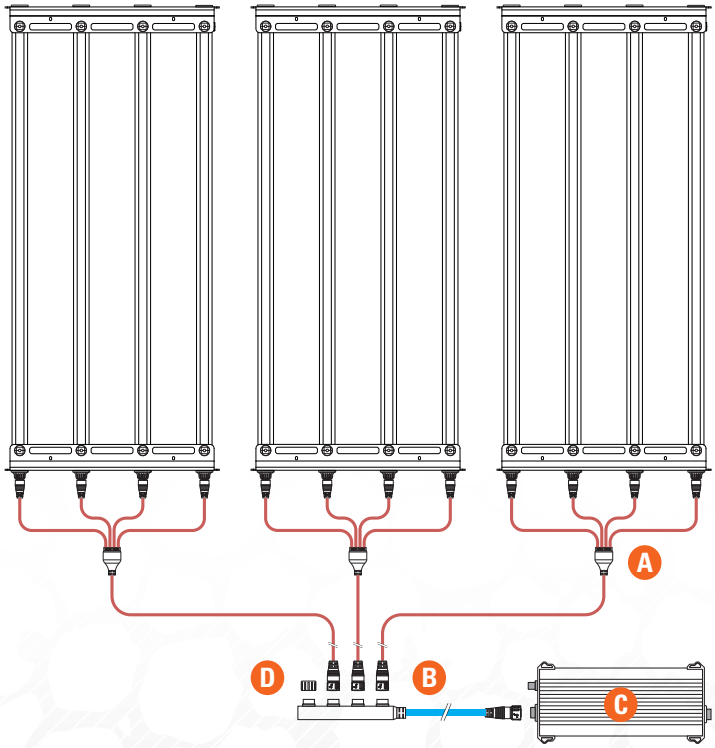

- A DC Splitter Cable
- B DC Manifold Cable
- C Power Supply
- D Dust Cap

5.3 - STEP 3: INSTALL THE DC SPLITTER AND MANIFOLD CABLES

DC Splitter Cables

All DC splitter cables use a push-lock type M16 2-pin connector to connect the cable to the light fixture LED bars to a port on the DC manifold cables.

Straight Connector

3-Bar DC Splitter

4-Bar DC Splitter

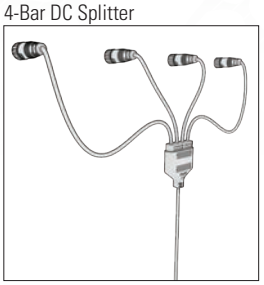

DC Manifold Cables

All DC manifold cables use an M16 2-pin connector to connect the manifold cable port to the DC splitter cable.

Use a dust cap (p/n CDCG-71285-05) to cover all unused manifold ports.

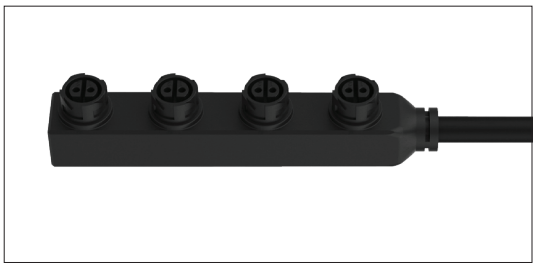

To Attach or Remove the Connectors:

1. To attach the connector, match up the keyed pins on the cable (male to female) to the receptacle and push it on until you hear a "click". Check that the connector is securely attached.
2. To remove the connector, twist the ring on the base of the connector counter-clockwise approximately a quarter turn until it stops to release, and then pull straight out.

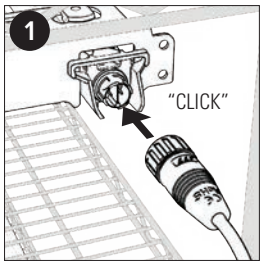

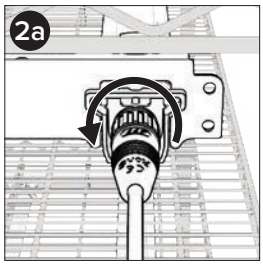

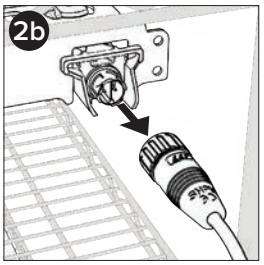

IMPORTANT:
- DO NOT plug in AC power **BEFORE** connecting the power supply to RAZR Modular light fixtures first.
- Install a dust cap on all unused DC manifold ports.

IMPORTANTE:
- NO conecte la alimentación de CA **ANTES** de conectar la fuente de alimentación a los dispositivos de iluminación RAZR Modular.
- Instale una tapa contra el polvo en todos los puertos del colector de CC que no se utilicen.

IMPORTANT:
- NE BRANCHEZ PAS le câble d'alimentation à une prise CA **AVANT** de brancher le cordon d'alimentation aux luminaires modulaires RAZR.
- Installez un capuchon anti-poussière sur tous les collecteurs CC inutilisés.

5.3 - STEP 3: INSTALL THE DC SPLITTER AND MANIFOLD CABLES

Installation Steps

1. Connect the plugs of the splitter end of the DC splitter cable to each light bar on the first fixture and the last fixture in the array for 2-foot wide fixtures, or the furthest set of light bars in 4-foot wide fixtures (see the examples below). Let the cable trunk ends hang loose.

2. Connect the trunk ends of the DC splitter cables to the first and last ports on the 4-port DC manifold cable. For 24-bar systems, also connect the manifold splitter cable to both 4-port DC manifold cables (see the examples below).

3. At this time the manifold location can be adjusted to the optimal location within the reach limitation of the splitter cables. **DO NOT stretch the DC splitter cables to the light bars too tightly, as this can cause stress on the light bar connection. Maintain a minimum of 1 inch (25.4 mm) of bend radius in all cables at the connector.**

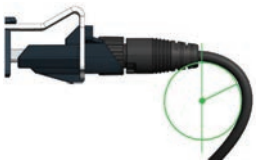

1 in (25.4 mm)

4. Connect the remaining DC splitter cable trunk ends to the ports on the DC manifold cable(s). Complete the cable management by securing loose cables and manifolds with wire ties to the rack (4a and 4b).

5. **Install a dust cap on any unused manifold ports.**

Baker's Rack, 2'x4' 3-Bar Fixture, 4-Fixture Array (12 Bars)

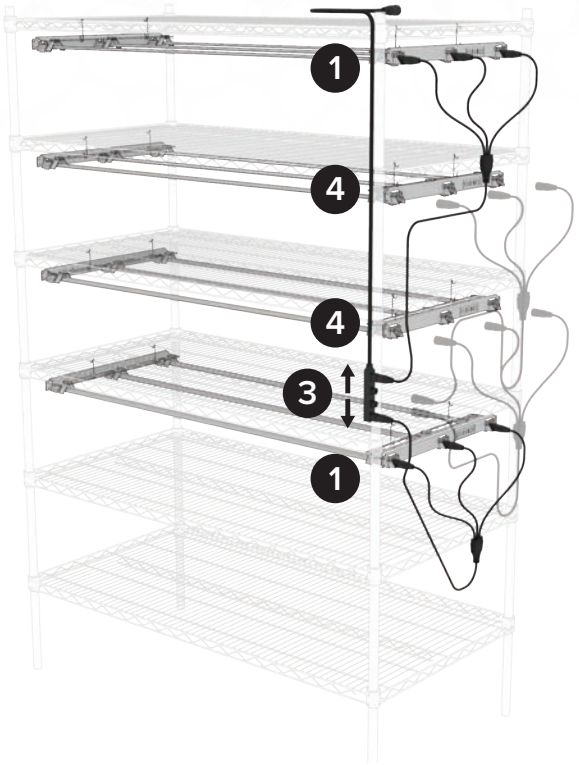

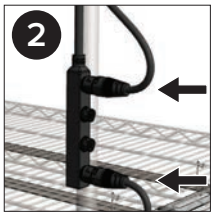

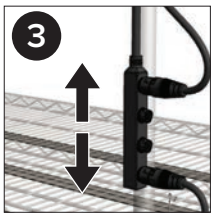

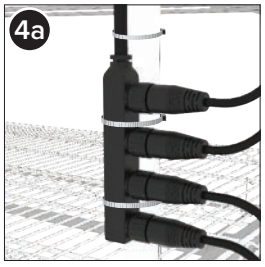

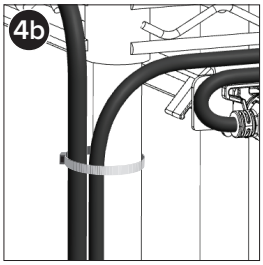

5.4 - STEP 4: MOUNT THE POWER SUPPLY

IMPORTANT: Ensure a minimum of 2 inches (5.08 cm) of clearance above the power supply between the ceiling or hard surface, and/or heat sources, to ensure sufficient air flow for proper cooling.

IMPORTANTE: Asegúrese de que haya un mínimo de 5,08 cm (2 pulgadas) de espacio libre por encima de la fuente de alimentación entre el techo o la superficie firme y / o las fuentes de calor, para garantizar suficiente flujo de aire para un enfriamiento adecuado.

IMPORTANT: Assurez-vous de maintenir un dégagement d'au moins 5,08 cm (2 pouces) au-dessus de l'alimentation électrique entre le plafond ou la surface dure et/ou les sources de chaleur pour assurer un débit d'air suffisant pour un refroidissement correct.

CAUTION:
- **DO NOT** plug in AC power **BEFORE** connecting the power supply to RAZR Modular light fixtures first.
- The use of gloves is recommended when handling and installing the power supply.

PRECAUCIÓN:
- **NO** conecte la alimentación de CA **ANTES** de conectar la fuente de alimentación a los dispositivos de iluminación RAZR Modular.
- Se recomienda el uso de guantes al tocar e instalar la fuente de alimentación.

ATTENTION:
- **NE BRANCHEZ PAS** le câble d'alimentation à une prise CA **AVANT** de brancher le cordon d'alimentation aux luminaires modulaires RAZR.
- L'utilisation de gants est recommandée lors de la manipulation et de l'installation de l'alimentation.

RAZR Modular kits contain parts for two mounting methods for the power supply. Stainless steel zip ties are provided to mount the power supply on top of a rack shelf, and Pipe wire hangers to suspend the power supply remotely. Mount the power supply in the optimal location where all cables can reach it, and there is enough slack in cables to avoid stress on the connectors.

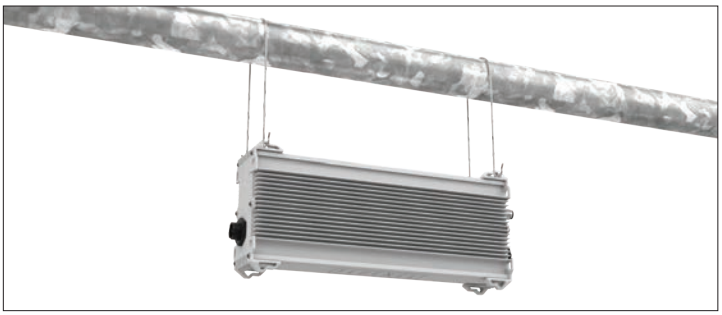

To Mount the Power Supply via Zip Ties:

1. Place the power supply flat on the top shelf of the rack as shown.
2. Insert a zip tie through a bottom corner loop on the power supply, wrap it around the wire grid. and pull back through the zip tie loop to tighten. Clip off the excess tie length with wire cutters.
3. Repeat for the remaining 3 bottom corner loops of the power supply so all 4 corners are securely attached.

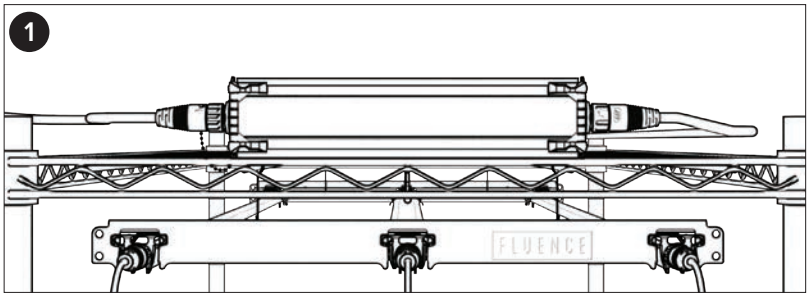

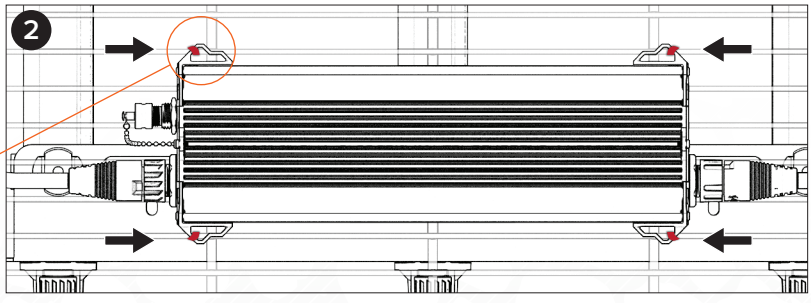

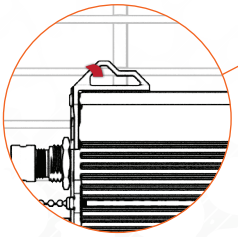

5. INSTALLATION STEPS

Power Supply Wire Hanger Installation Instructions

Pipe Hanger Kit (AMV2-10121-20)

Ideal for mounting under pipes up to 1 ¾" (45 mm) in diameter.

1. Take (2) mounting brackets and hang a bracket over the support structure. Locate the holes for brackets on the narrow side of PSU power supply, hold up the power supply under the support structure under it.

2. While maintaining a firm grip on both, pinch the bottom of the bracket inward and horizontally insert it into the receiving holes on the PSU power supply, release the tension of the bracket.

3. Lift the ends of the brackets up to a 90° angle. Repeat above steps to install another bracket on the PSU power supply.

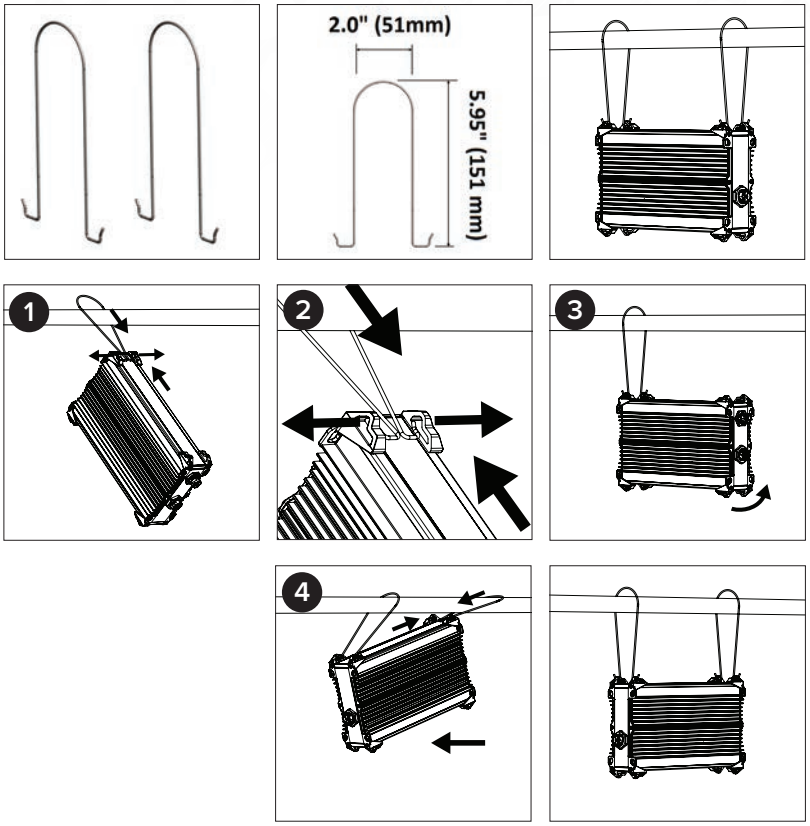

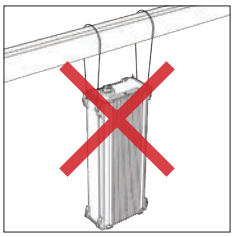

IMPORTANT: DO NOT mount the power supply vertically using wire-form type hangers. To mount the power supply vertically, use a Surface Mount Kit secured to a flat surface.

IMPORTANTE: NO coloque la fuente de alimentación verticalmente utilizando perchas de forma de alambre. Para montar la fuente de alimentación verticalmente, utilice un kit de montaje en superficie fijado a una superficie plana.

IMPORTANT: NE PAS monter l'alimentation électrique à la verticale en utilisant des supports de type fil de fer. Pour monter l'alimentation électrique à la verticale, utilisez un kit de montage en surface fixé sur une surface plane.

5.5 - STEP 5: CONNECT THE DC MANIFOLD CABLE(S) TO THE POWER SUPPLY

IMPORTANT: Please be sure to match the EXACT light bar quantity per power supply to the BAR COUNT on Power Supply SKU label for proper system performance. A differed bar count from SKU label would result in INCORRECT LIGHT OUTPUT from light bars.

IMPORTANTE: Asegúrese de aparear la cantidad EXACTA de barras de luz por la fuente de alimentación con el CONTADOR DE BARRAS en la etiqueta SKU de la fuente de alimentación para un rendimiento adecuado del sistema. Un recuento de barras diferente al de la etiqueta SKU daría como resultado una SALIDA DE LUZ INCORRECTA de las barras de luz.

IMPORTANT: Assurez-vous de faire correspondre la quantité EXACTE de barres lumineuses par alimentation électrique au NOMBRE DE BARRES indiqué sur l'étiquette de référence de l'alimentation électrique pour une performance correcte du système. Un nombre de barres différent de celui sur l'étiquette de référence entraînerait un FLUX LUMINEUX INCORRECT des barres lumineuses.

All DC manifold cables use a push-lock type M19 2-pin connector to connect the cable to the power supply or manifold splitter cable.

To Attach or Remove the Connectors:

1. To attach the connector, match up the keyed pins on the cable (male to female) to the receptacle and push it on until you hear a "click". Check that the connector is securely attached.
2. To remove the connector, twist the ring on the base of the connector counter-clockwise approximately a quarter turn until it stops to release, and then pull straight out.

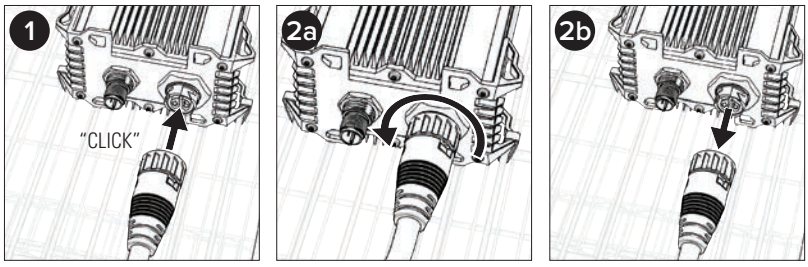

5.6 - STEP 6: CONNECT THE AC POWER CABLE TO THE POWER SUPPLY

All AC power cables use a push-lock type M19 3-pin connector to connect the cable to the power supply. The connection to power is available in several plug types for receptacles, or in pigtails for direct wiring.

To Attach or Remove the Connectors:

1. To install the connector, match up the keyed pins on the cable (male to female) to the receptacle and push it on until you hear a "click". Check that the connector is securely attached.
2. To remove the connector, twist the ring on the base of the connector counter-clockwise approximately a quarter turn until it stops to release, and then pull straight out.

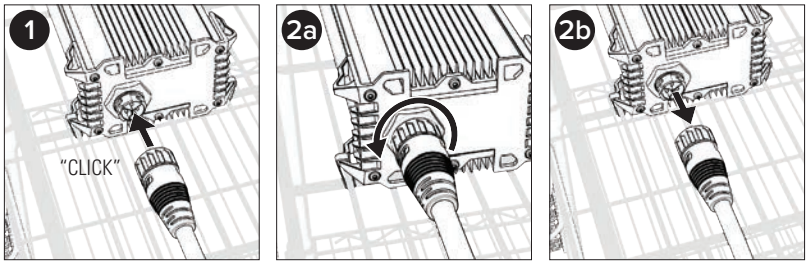

5.6 - STEP 6: CONNECT THE AC POWER CABLE TO THE POWER SUPPLY

IMPORTANT: Please be sure to match the EXACT light bar quantity per power supply to the BAR COUNT on Power Supply SKU label for proper system performance. A differed bar count from SKU label would result in INCORRECT LIGHT OUTPUT from light bars.

IMPORTANTE: Asegúrese de aparear la cantidad EXACTA de barras de luz por la fuente de alimentación con el CONTADOR DE BARRAS en la etiqueta SKU de la fuente de alimentación para un rendimiento adecuado del sistema. Un recuento de barras diferente al de la etiqueta SKU daría como resultado una SALIDA DE LUZ INCORRECTA de las barras de luz.

IMPORTANT: Assurez-vous de faire correspondre la quantité EXACTE de barres lumineuses par alimentation électrique au NOMBRE DE BARRES indiqué sur l'étiquette de référence de l'alimentation électrique pour une performance correcte du système. Un nombre de barres différent de celui sur l'étiquette de référence entraînerait un FLUX LUMINEUX INCORRECT des barres lumineuses.

POWER SUPPLY WIRING

LVG 292 W 120-277 V AC POWER SUPPLY

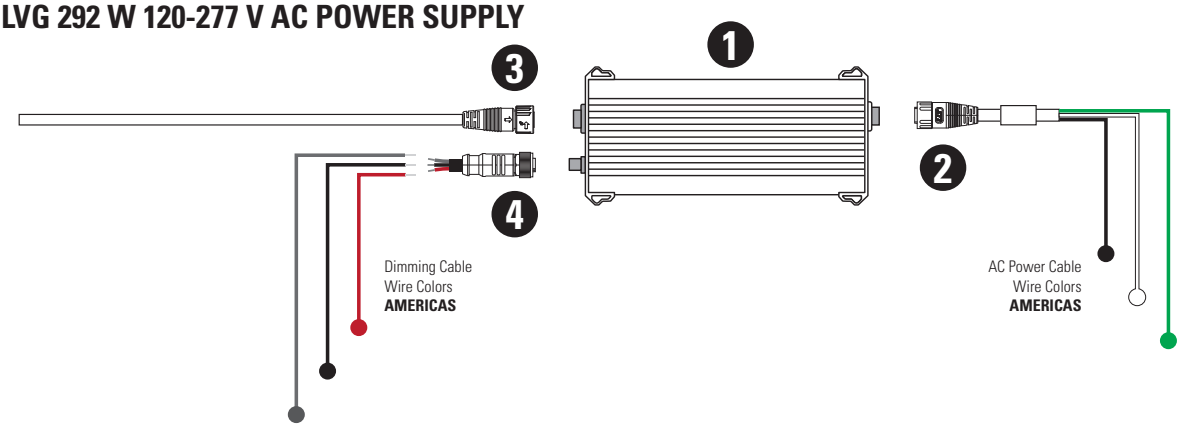

COMPONENTS

1. Power Supply
2. AC Power Cable to Power Supply
3. DC Power Cable to Light Fixtures
4. DC Dimming Signal Cable to Power Supply

DIMMING SPECIFICATIONS

Dimming Input	Off/on 0/1-10V Sink Dimming, Source Driver
Dimming Range	10-100 %, Linear
Typ / Max Source Current @ Vdim=0V	400 µA/ 500 µA
Voltage @ Full load	10 V
Voltage Dim to OFF	0.8 V
Voltage Dim to ON	1.0 V
Hysteresis (V / %)	0.2 V / 2 %

❷ ❺ AC POWER CABLE CONNECTIONS

AC Cable Wire Color Americas	Power Supply Pin Connection
White	Neutral (N)
Black	Line (L)
Green	Ground (GND)

❹ DC DIMMING SIGNAL CABLE CONNECTIONS

DC Dimming Cable Wire Color Americas	Power Supply Pin Connection
Red	DIM (+)
Black	DIM (-)
Bare Wire	Shield Drain (not connected to PS)

NOTE: Connect the dim cable shield drain to only one PE ground connection point, i.e. at the dimming control panel.

Power Supply Connector	Connector Type	Pin Assignments
AC Power Connector	Push-lock Male M19, 3-pin	Pin N: Neutral Pin L: Line Pin G: Ground
DC Power Connector	Push-lock Female M19, 2-Pin	Pin 1: LED (-) Pin 2: LED (+)
Dimming Connector	IEC61076-2-101 Threaded A-Code Male M12, 3-pin	Pin 1: Dim (-) Pin 3: Dim (+) *Pin 4: 12VDC+

*Not Connected to Dimming Cable

5.7 - STEP 7: (OPTIONAL) CONNECT THE DC DIMMING CABLE TO THE POWER SUPPLY AND THEN TO A DIMMING CONTROLLER

The DC dimming cable uses a coaxial type A-code M12 3-pin connector to connect the cable to the power supply. To install the DC dimming cable:

1. Remove the dust cap from the power supply dimming port and let it hang by the chain.

2. Match up the connector end on the cable (female) to the power supply dimming port (male) and twist the ring on the connector clockwise to tighten until hand-tight. Check that the connector is securely attached.

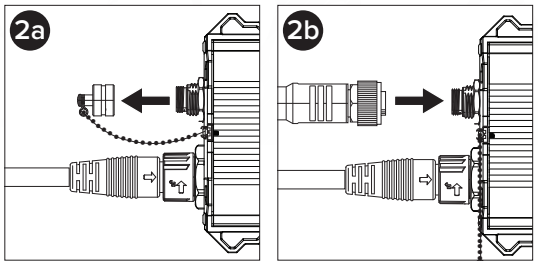

5.8 - STEP 8: POWER AND TEST THE SYSTEM

1. Turn on AC power to the system. All light fixtures should be on and at equal levels of maximum brightness.

2. If a dimming controller has been connected, test the light fixtures by dimming to off and ramping back up to maximum.

THIS COMPLETES THE INSTALLATION!

If the system testing was not successful, please refer to Section 5 for Troubleshooting.

For additional assistance, please contact:

www.fluence.science/support-center/

or email **support@fluence.science**

6. TROUBLESHOOTING

CONDITION	POTENTIAL CAUSE	RESOLUTION
Some installed LED light bars are at different brightness levels even though a dimmer is not installed.	The quantity of light bars per power supply are not correctly matched.	Check the power supply label first to identify how many light bars should be connected to it. Add or remove light bars to the correct quantity for the power supply or order the correct power supply for the quantity of installed light bars.
One LED light bar does not come on.	The connection of the DC splitter cable to the LED light bar is not secure, or the light bar or DC splitter cable are possibly the cause.	1. Check for proper connection of the DC splitter cable to the light bar.
		2. Swap the light bar to a different location in the array. Replace if the cause.
		3. Remove the DC splitter cable from the light bars and power supply and perform a continuity test of the cable. Replace if the cause.
		4. If the above do not resolve the issue, contact Fluence Support.
All LED light bars in the system do not come on.	AC power is not connected correctly, or the power supply, AC power cable, or DC Power manifold cable are possibly defective.	1A. Check that AC power is properly connected, present, and correct any deficiencies. 1B. Check the dimmer level. Removing the dimmer cable from the driver - all lights should be on at 100% (could be a shortcut in the dimming circuit)
		2. Check that the power supply is outputting the correct DC power at the port pins by using a multimeter set for DC volts. Replace if the cause.
		3. Remove the DC power cables from the light bars and AC cable from the power supply and perform a continuity test of the cables. Replace if the cause.
		4. If the above do not resolve the issue, contact Fluence Support.
The system does not dim or perform as expected when connected to a dimmer.	The dimmer is not installed correctly, or the dimmer is not compatible. The dimming cable is possibly the cause.	1. Ensure the dimmer is 0-10V Sink control compatible and has enough sinking capacity for the connected power supplies.. Replace the dimmer If incorrect or the cause.
		2. Check the dimming cables for correct connection and polarity. Correct any deficiencies.
		3. Remove the DC dimming cable from the dimmer and power supply and perform a continuity test of the cable. Replace if the cause.
		4. Replace the power supply.
		5. If the above do not resolve the issue, contact Fluence Support.

7. OUR PRODUCT GUARANTEE & WARRANTY

Every Fluence Lighting system is engineered and built by Fluence Bioengineering using state-of-the-art robotics and hand craftsmanship. All Fluence Lighting systems are guaranteed against manufacturing defects for five years from date of purchase. Fluence lighting systems comply with applicable standards and are intended to be used with Fluence power supplies, cables and mounting hardware. The use of Fluence lighting systems with power supplies, cables and mounting hardware by others will limit specifications and void the warranty. Contact us at **support@fluence.science** for more warranty information.

We stand behind our research, we stand behind our technology and we stand behind our clients. **www.fluence.science/warranty/**

FLUENCE
BY OSRAM

Review our products, share your grow and stay abreast of the latest Fluence news and product releases through the channels below:

fluence.science

© Copyright 2021. Fluence Bioengineering, Inc.
062021 • 71863B